Product Code:

RoHS Compliant

LPB3215SW1105-TA-12-3.9-R

Picture:`

SPL & Current Consumption vs. Input Voltage:

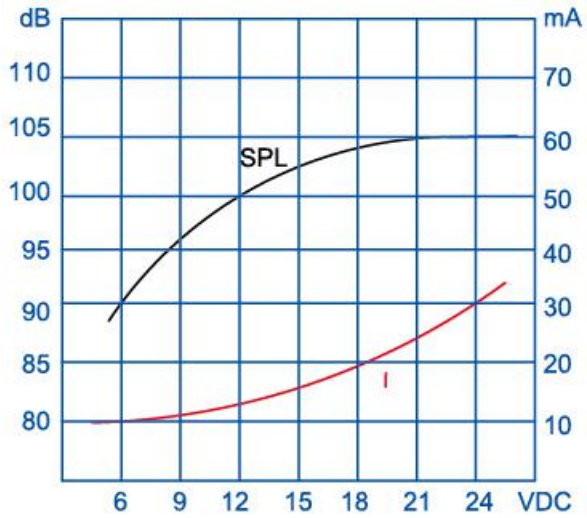

Specification:

Rated Voltage	(VDC)	12
Operating Voltage	(VDC)	3～20
*Rated Current	(mA)	≤12
*Sound Output at 30cm	(dB)	≥95
*Resonance Frequency	(KHz)	3.9±0.5
Tone		Continuous
Operating Temperature	(℃)	-20～+70
Storage Temperature	(℃)	-30～+80
Weight	(g)	7.5
Housing Material		ABS
RoHS		Yes

Remark: The special requirements in the test for no anti reverse connection。

*Value applying at rated voltage.

Test basic state: Temp(20±2℃) , Humidity(40~70%RH) , Air pressure(860~1060hPa).

Dimensions (Unit: mm)
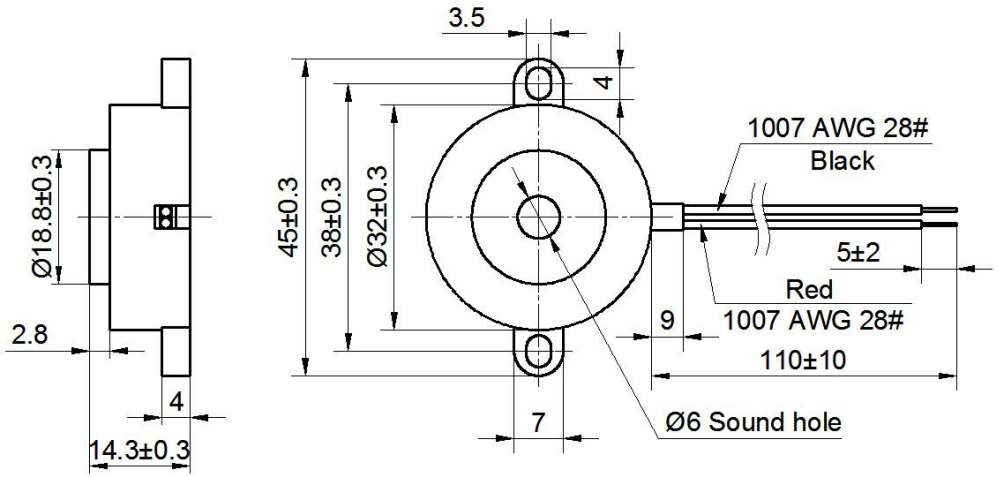
Tolerance: ±0.5mm Except Specified